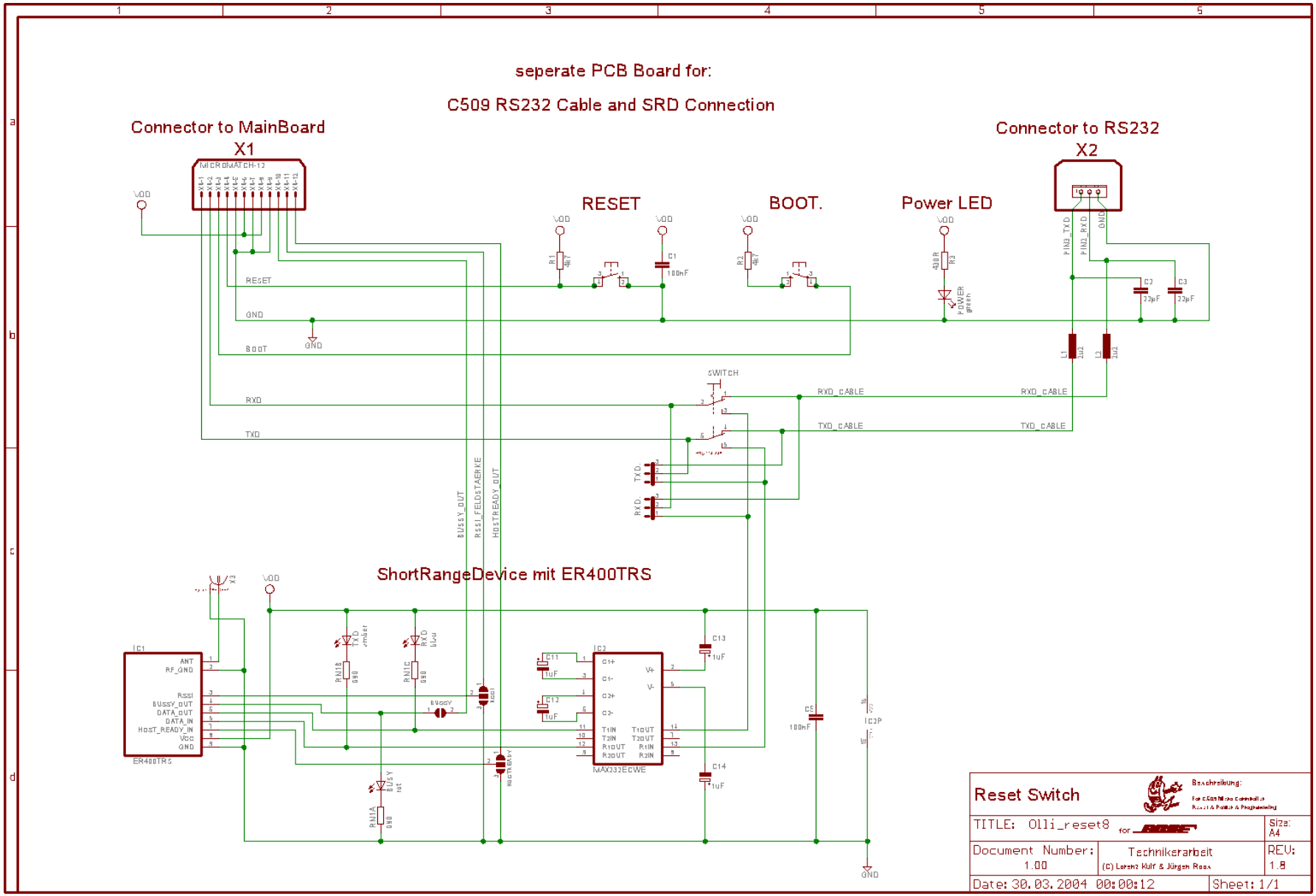
seperate PCB Board for:
C509 RS232 Cable and SRD Connection
Connector to MainBoard
X1
Connector to RS232
X2
RESET
BOOT.
Power LED
ShortRangeDevice mit ER400TRS
SWITCH
RXD_CABLE
TXD_CABLE
BUSSY_OUT
RSSI_FELDSTAERKE
HOSTREADY_OUT
IC1
ER400TRS
IC2
MAX232ECWE
GND
VDD
Reset Switch
TITLE: Olli_reset8
Size: A4
Document Number: 1.00
Technikerarbeit
(C) Lorenz Kuhr & Jürgen Roos
REV: 1.8
Date: 30.03.2004 00:00:12
Sheet: 1/1